TY4.0-F

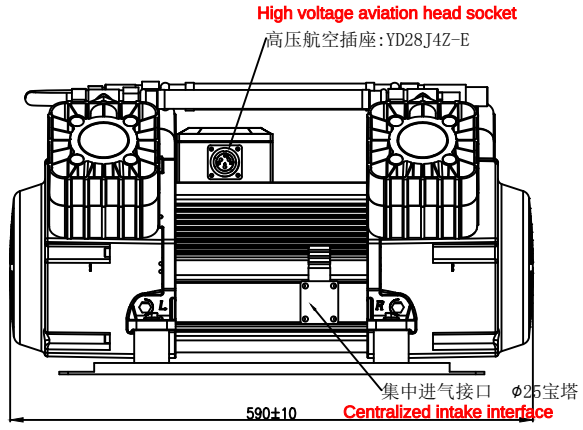

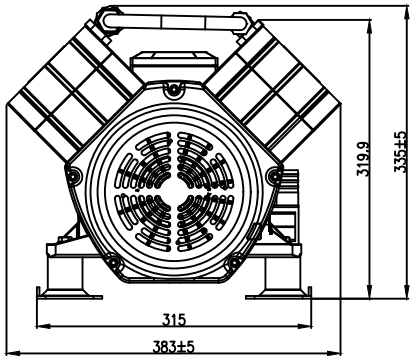

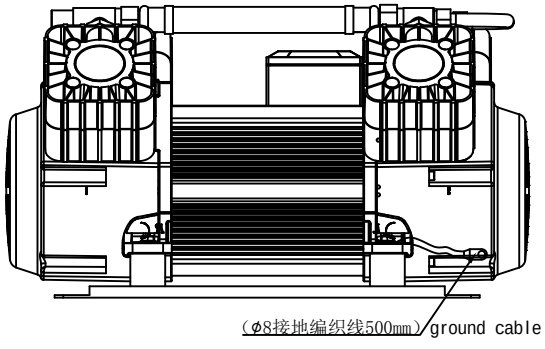

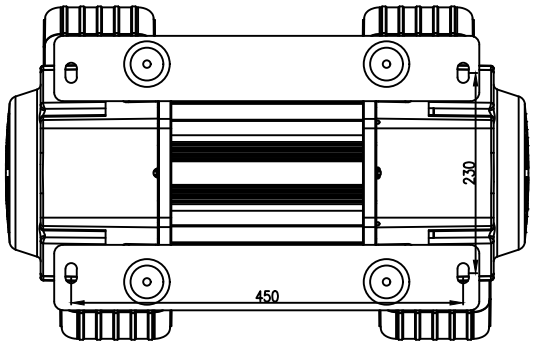

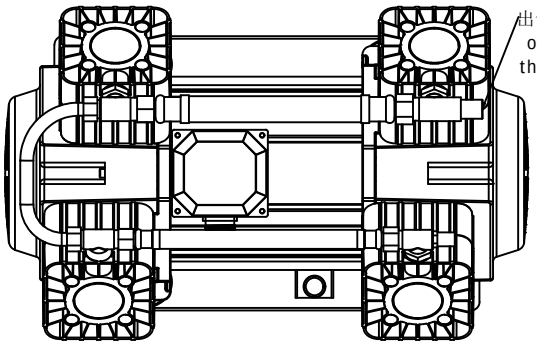

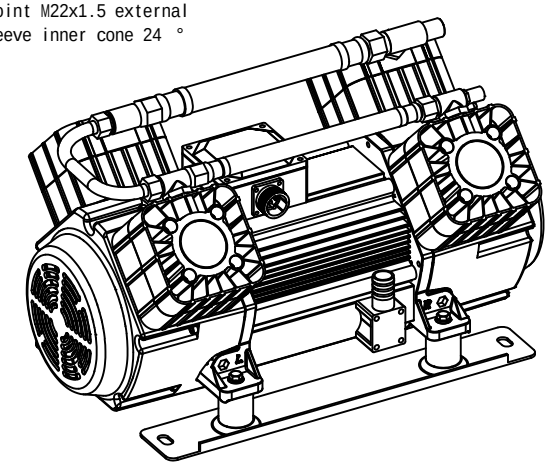

高压插件定义：Definition of high-voltage plug-in:

空压机端：YD28J4Z-E(空压机厂家自带)Air compressor end: YD28J4Z-E (provided by the air compressor manufacturer)

车上线束端：YD28K4TSJ(空压机厂家配)（1-地，2-U，3-V,4-W,三芯线束1#接地针脚可不接，插头线束防水胶塞孔径12mm）Car wiring harness end: YD28K4TSJ (provided by the air compressor manufacturer) (1-ground, 2-U, 3-V, 4-W, three core wire harness 1 # ground pin can be left unconnected, plug wire harness waterproof plug hole diameter is 12mm)

转向无要求，定义插针相位只是便于作业规范。There is no requirement for turning, defining the phase of the pin is only for the convenience of standardized operation

技术要求：Technical requirements:

1、本系列空压机均采用三相异步电机,工作运行电压380V±5%，运行频率50HZ；1. This series of air compressors all use three-phase asynchronous motors, with a working operating voltage of 380V ± 5% and a operating frequency of 50Hz;

2、空压机高压电源插座型号：YD28J4Z-E；接线顺序1-地、2-W、3-U、4-V（原则上三相电源接线相序不做要求，本条定义只是便于作业规范）；

2. High voltage power socket model of air compressor: YD28J4Z-E; The wiring sequence is 1-ground, 2-W, 3-U, 4-V (in principle, there is no requirement for the phase sequence of three-phase power supply wiring, and this definition is only for the convenience of operation specifications);

3、进气口通过软管(2米/台)连接外置过滤器，用卡箍固定；(批量整卷足米数提供)

3. The air inlet is connected to an external filter through a hose (2 meters per unit) and fixed with a clamp; (Batch full roll meters provided)

4、空压机电机供电方式为直启直停，无需延迟（不用加速时间和减速时间）。

4. The power supply mode of the air compressor motor is direct start and stop, without delay (without acceleration and deceleration time).

5、车上干燥器在打满气后必须能够泄掉前端管路的气压。（0MPa~0.2MPa）

5. The car dryer must be able to release the air pressure from the front end pipeline after being filled with air.

model	HD-V4-F	motor power(KW)	4.0	motor voltage	AC380V	rated/peak(HZ)	50/50
rated/peak cur A)	8.5/12	flow(Nº/min)	0.4	air exhaut(MPa)	1.0	motor poles	2 pair
speed（RPM）	1440	noise(dB)	75	protection	IP67		
relief valve unloading pressure	1.2MPa	HV terminal	YD28J4Z-E	weight（KG）	55		

标记	处数	更改单号	签字	日期	车载无油空压机（异步）on board no oil vacuum motor pump（材料）
设计			标准		
校对			批准		
审核			会签		

TY4.0-F

图样标记	质量	比例
B		1:1
共 页	第 页	

Green Motor Technology